产品规格书

产品名称：液晶显示模组

型　　号：HT101IBC-33Z5HX-BS-V.0

日　　期：2022-04-11

版　　本：V.0

品质部	工程部	审核
施振业	何志新	何志新

REVISION RECORD

REV NO	REV DATE	CONTENTS	REMARKS
1.0	2022-04-11	First Release	

TABLE OF CONTENT

1.0 GENERAL SPECIFICATIONS

2.0 ELECTRICAL CHARACTERISTICS

3.0 BACKLIGHT CHARACTERISTICS

4.0 DIMENSIONAL DRAWING

5.0 INTERFACE PIN CONNECTIONS

6.0 ELECTRO-OPTICAL CHARACTERISTICS

7.0 INSPECTION CRITERIA

8.0 RELIABILITY

9.0 PRECAUTIONS FOR USING LCD MODULE

10.0 USING LCD MODULES

1.0 General Specifications

HT101IBC-33Z5HX-BS is a color active matrix LCD module incorporatingamorphous silicon TFT (Thin Film Transistor). It is composed ofa colorTFT-LCD panel, driver IC, FPC and a back light unit. The moduledisplay areacontains 1024x 600pixels. This product accords with RoHS environmentalcriterion.

Item	Contents	Unit
LCD Type	TFT TRANSMISSIVE	/
Viewing direction	ALL	O' Clock
Module outline (W x HxD)	235x143x3.5	mm
Active area (WxH)	222.72x125.28	mm
Number of Dots	1024(RGB) x600	/
Driver IC		/
Backlight Type	3*11 chips white LED	/
Interface Type	Parallel RGB 24-bit	/
Input voltage	3.3	V

2.0 ELECTRICAL CHARACTERISTICS

Item	Symbol	Values			Unit	Remark
		Min.	Typ.	Max.		
Power Voltage	DVDD	3.0	3.3	3.6	V	
	AVDD	---	9.6	---	V	
	VGH	---	18	---	V	
	VGL	---	-6	---	V	
Input signal voltage	VCOM	---	4.4	---	V	
Input logic high voltage	VIH	0.9VDD	-	DVDD	V	
Input logic low voltage	VIL	0	-	0.1DVDD	V	

Note1：If users use the product out off the environmemtal operation range（temperature and humidity）,it will have visual quality concerns.

Note2：Be sure to apply DVDD and VGL to the LCD first,and then apply VGH

Note3：DVDD setting should match the signals output voltage(refer to Note4)of customer's system board.

Note4：DCLK,HS,VS,RESET,U/D,L/R,DE,R0-R7.G0-G7,B0-B7,MODE,DITHB.

Note5：Typical VCOM is only a reference value,it must be optimized according to each LCM. Please ues VR and base on below application circuit.

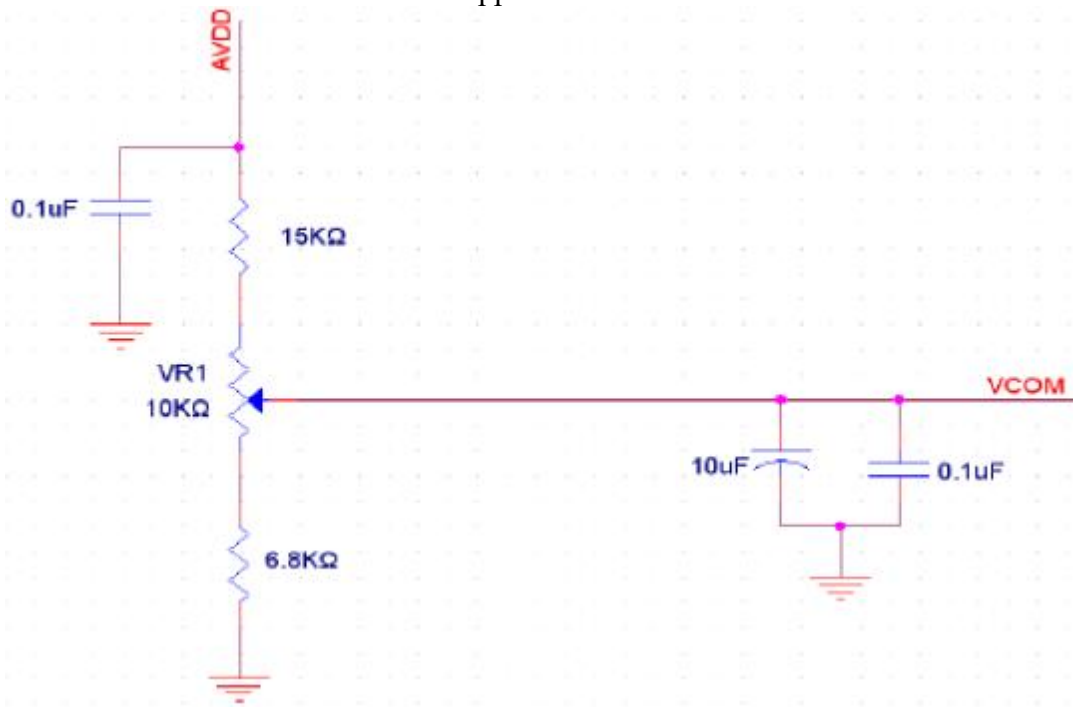

Current Consumption

Item	Symbol	Values			Unit	Remark
		Min.	Typ.	Max.		
Current for Driver	IGH	-	0.50	1	mA	VGH=18.0V
	IGL	-	0.50	1	mA	VGL=-6.0V
	IVDD	-	8	15	mA	VDD=3.3V
	IAVDD	-	30	40	mA	AVDD=9.6V

3.0 BACKLIGHT CHARACTERISTICS

Item	Symbol	Min	Typ	Max	Unit	Condition
Forward voltage	**Vf**	-	9.6	-	**V**	**If=220mA**
Luminance	**Lv**	-	400	-	**cd/m2**	**If=220mA**
Number of LED	**--**	33			**Piece**	--
Connection mode	**P**	3chips serial *11			--	--

4.0 DIMENSIONAL DRAWING

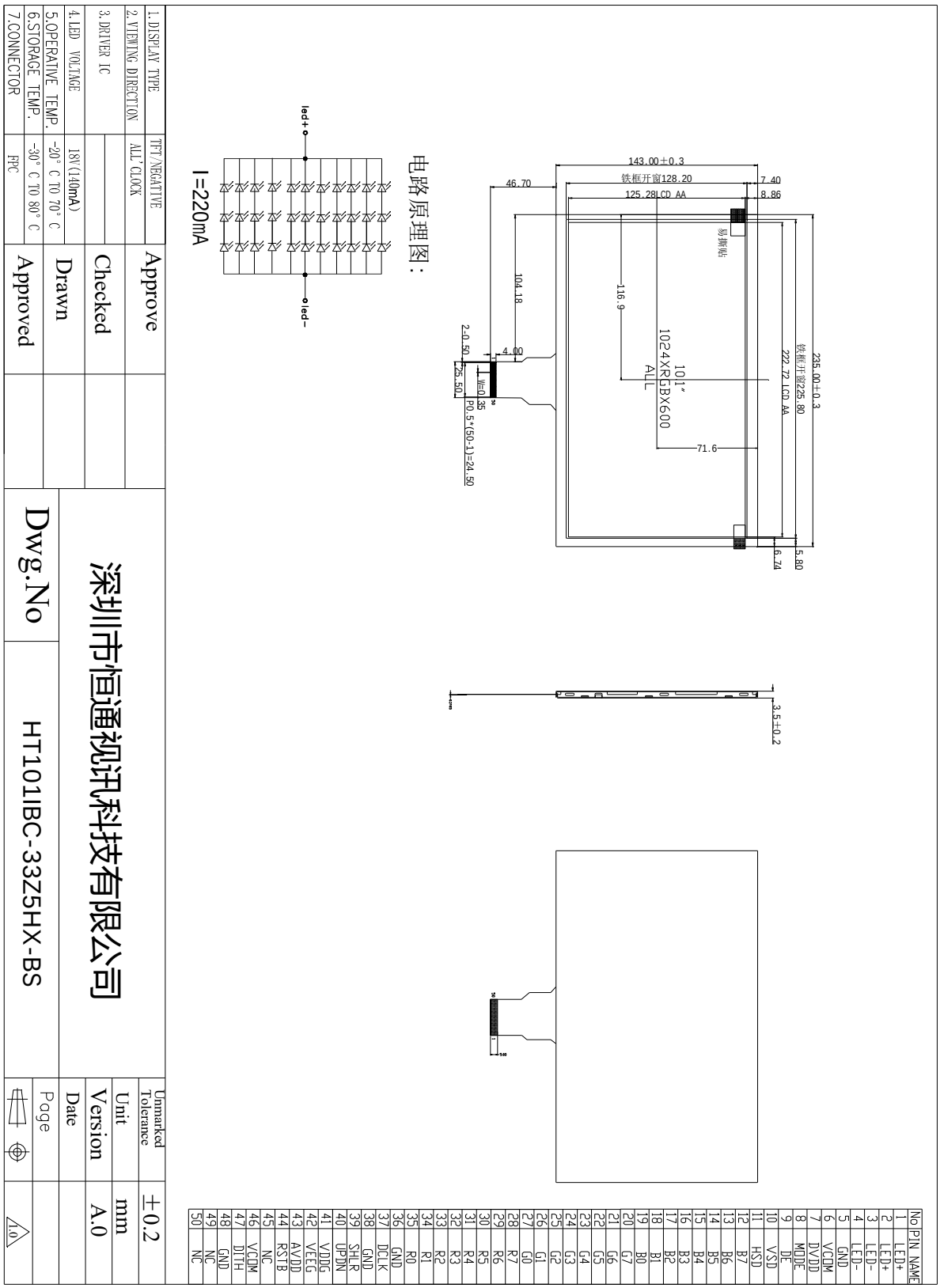

No	PIN	NAME
1		LED+
2		LED+
3		LED-
4		LED-
5		GND
6		VCOM
7		DVDD
8		MODE
9		DE
10		VSD
11		HSD
12		B7
13		B6
14		B5
15		B4
16		B3
17		B2
18		B1
19		B0
20		G7
21		G6
22		G5
23		G4
24		G3
25		G2
26		G1
27		G0
28		R7
29		R6
30		R5
31		R4
32		R3
33		R2
34		R1
35		R0
36		GND
37		DCLK
38		GND
39		SHLR
40		UPDN
41		VDDG
42		VEEG
43		AVDD
44		RSTB
45		NC
46		VCOM
47		DITH
48		GND
49		NC
50		NC

1. DISPLAY TYPE	TFT/NEGATIVE
2. VIEWING DIRECTION	ALL CLOCK
3. DRIVER IC	
4. LED VOLTAGE	18V(140mA)
5.OPERATIVE TEMP.	-20° C TO 70° C
6.STORAGE TEMP.	-30° C TO 80° C
7.CONNECTOR	FPC

Approve		
Checked		
Drawn		
Approved		

深圳市恒通视讯科技有限公司

Dwg.No	HT101IBC-33Z5HX-BS

Unmarked Tolerance	±0.2
Unit	mm
Version	A.0
Date	
Page	

5.0 INTERFACE PIN CONNECTIONS

Pin.No	Symbol	Function
1,2	NC	NC
3,4	NC	NC
5	GND	Power ground
6	VCOM	Common Voltage
7	DVDD	Digital Power
8	MODE	DE/SYNC mode select. Normally pull high H: DE mode. L: HSD/VSD mode
9:	DE	Data Enable signal.
10	VSD	Vertical sync input. Negative polarity
11	HSD	Horizontal sync input. Negative polarity
12-19	B7-R0	Blue Data
20-27	G7-G0	Green Data
28-35	R7-R0	Red Data
36	GND	Ground
37	DCLK	Colock signal
38	GND	Display on/off
39	SHLR	Left or Right Display Control
40	UPDN	Up / Down Display Control
41	VDDG	Positive Power for TFT
42	VEEG	Negative Power for TFT
43	AVDD	Analog Power
44	RSTB	Global reset pin. Active low to enter reset state. Suggest to connecting with an RC reset circuit for stability. Normally pull high. (R=10KΩ，C=1μF)
45	NC	Not connect
46	VCOM	Common Voltage
47	DITH	Dithering setting DITH=”H” 6bit resolution(last 2 bit of input data truncated) DITH=”L” 8bit resolution(default setting)
48	GND	Power ground
49	NC	Not connect
50	NC	Not connect

5.1 Timing characteristics

5.1.1 AC Electrical Characteristics

Item	Symbol	Values			Unit	Remark
		Min.	Typ.	Max.		
HS setup time	Thst	5	-	-	ns	
HS hold time	Thhd	5	-	-	ns	
VS setup time	Tvst	5	-	-	ns	
VS hold time	Tvhd	5	-	-	ns	
Data setup time	Tdsu	5	-	-	ns	
Data hold time	Tdhd	5	-	-	ns	
DE setup time	Tesu	5	-	-	ns	
DE hold time	Tehd	5	-	-	ns	
VDD Power On Slew rate	TPOR	-	-	20	ms	From 0 to 90% VDD
RESET pulse width	TRST	1	-	-	Ms	
DCLK cycle time	Tcoh	14	-	-	Ns	
DCLK pulse duty	Tcwh	40	50	60	%	

5.1.2 Input Clock and Data Timing Diagram

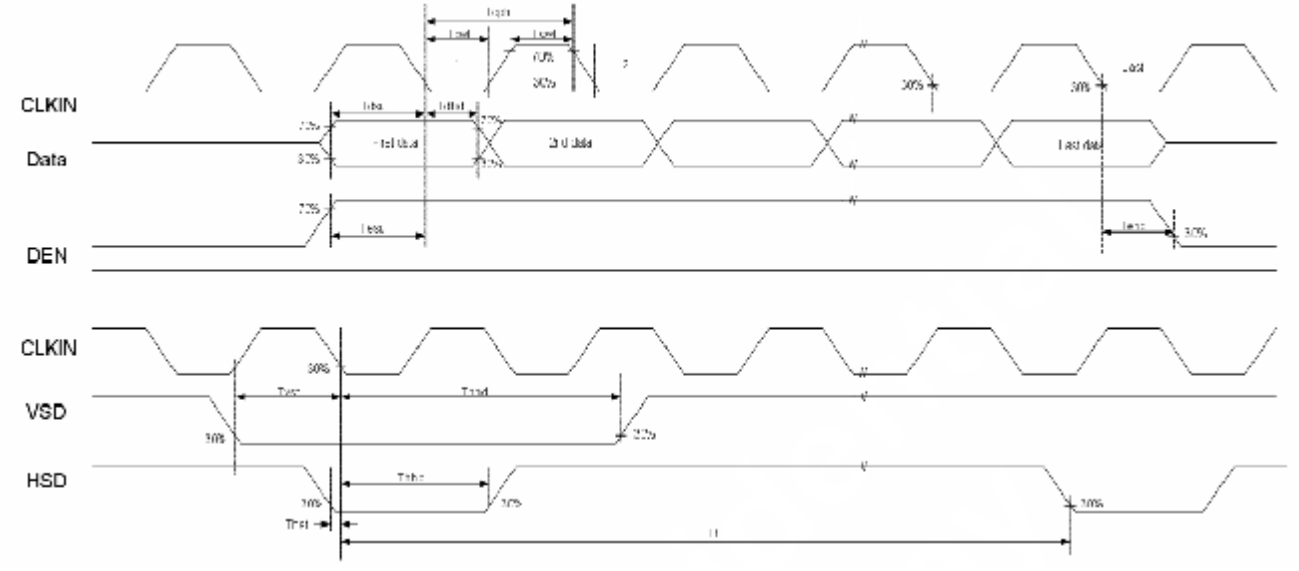

5.1.3 Timing

Item	Symbol	Values			Unit	Remark
		Min.	Typ.	Max.		
DCLK Frequency	fclk	44.9	44.9	51.2	DCLK	
Horizontal Display Area	thd	-	1024	-	DCLK	
VS period time	fclk	1200	1200	1344	MHz	
HS pulse width	thpw	1	70	140	DCLK	
HS Blanking	thb	160	160	160	DCLK	
HS Front Porch	thfp	16	160	160	DCLK	
Vertical Display Area	tvd	-	600	-	TH	
VS period time	tv	624	635	635	TH	
VS pulse width	tvpw	1	20	20	TH	
VS Blanking	tvb	23	23	23	TH	
VS Front Porch	tvfp	1	12	127	TH	

5.1.4 Data Input Format

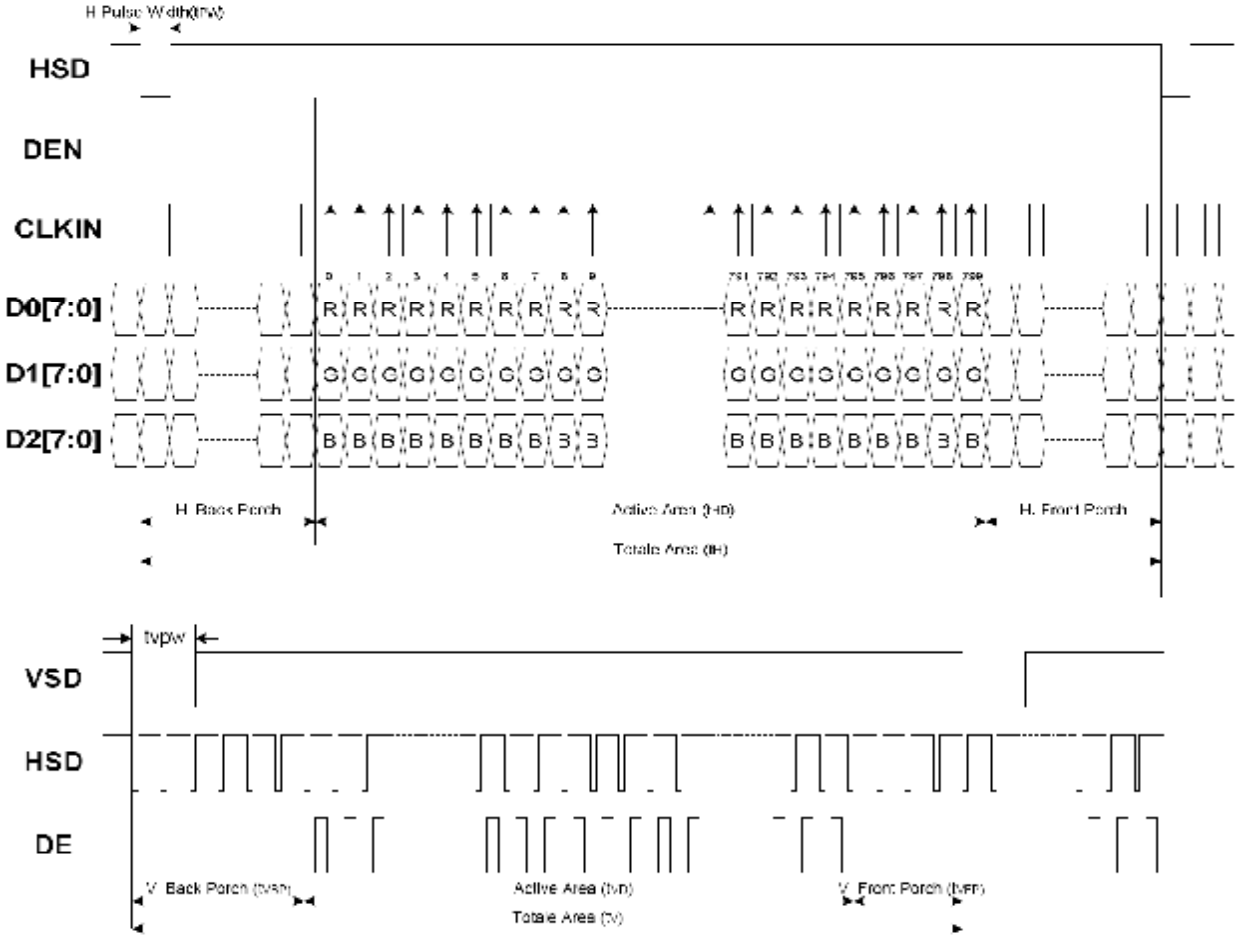

5.2 POWER ON/OFF SEQUENCE

a. Power on:

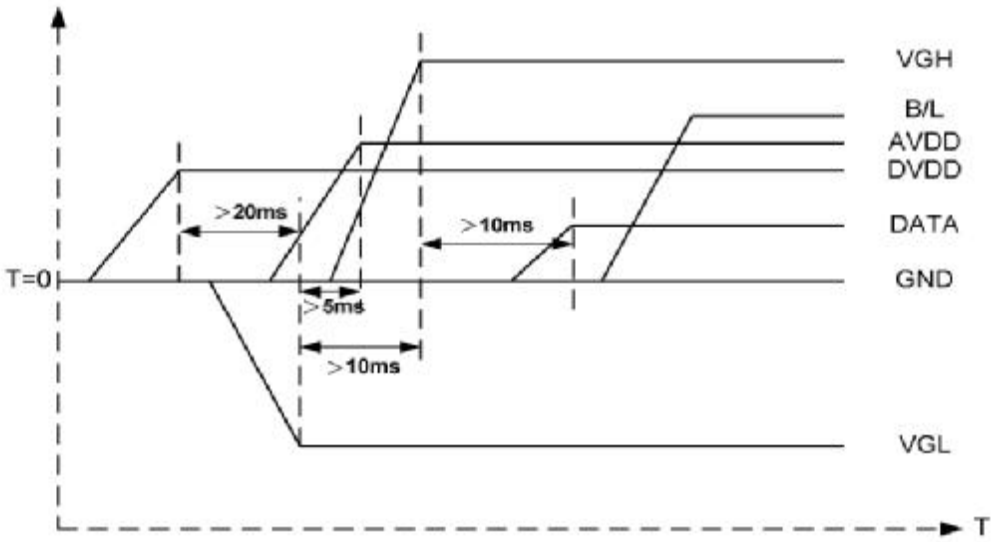

DV_{DD}→VGL→AVDD→VGH→Data→B/L

b. Power off:

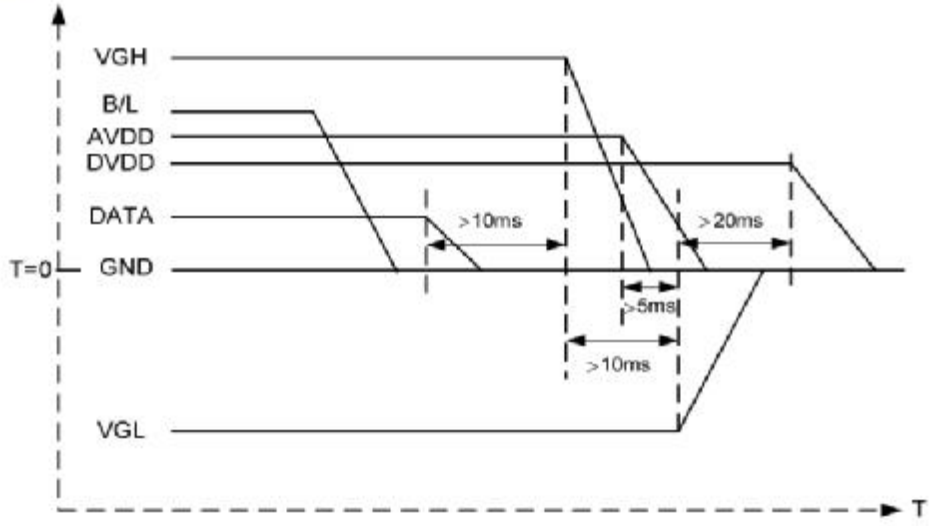

B/L→Data→VGH→AVDD→VGL→DV_{DD}

Note: Data include R0~R7, B0~B7, GO~G7, U/D, L/R, DCLK, HS,VS,DE.

6. ELECTRO-OPTICAL CHARACTERISTICS

Item	Symbol	Condition	Temp	Min	Typ	Max	Units	Note
Transmittance	Tr		--	4.8	5.8	----	%	--
Response Time	Rise Time (Tr)	θ=ψ= 0	-10℃	----	----	----	msec	6.3
	Decay Time (Td)			----	----	----		
	(Tr+Td)		25℃	----	30	40		
	Rise Time (Tr)		60℃	----	----	----		
	Decay Time (Td)			----	----	----		
Viewing Angle Range	θ	ψ=0°	25℃	----	85	----	Deg	6.4
		ψ=90°		----	85	----		
		ψ=180°		----	85	----		
		ψ=270°		----	85	----		
Contrast Ratio	Cr	θ=ψ= 0	25℃	----	800	----	---	6.5

6.1 Electro-Optical Characteristics Test Method

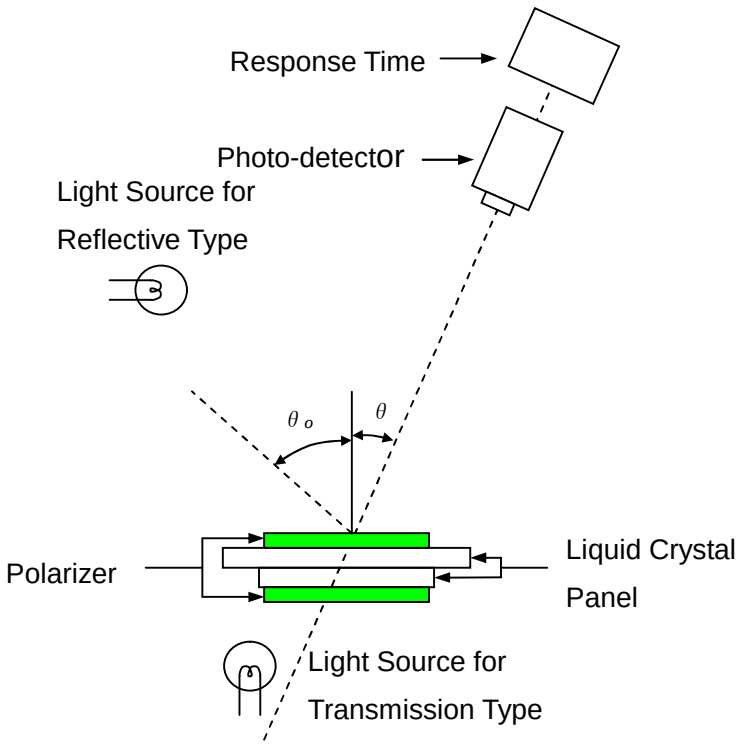

6.2 Definition of Operating Voltage, Vop

$$Vop = (V_{10,ON} + V_{90,OFF})/2$$

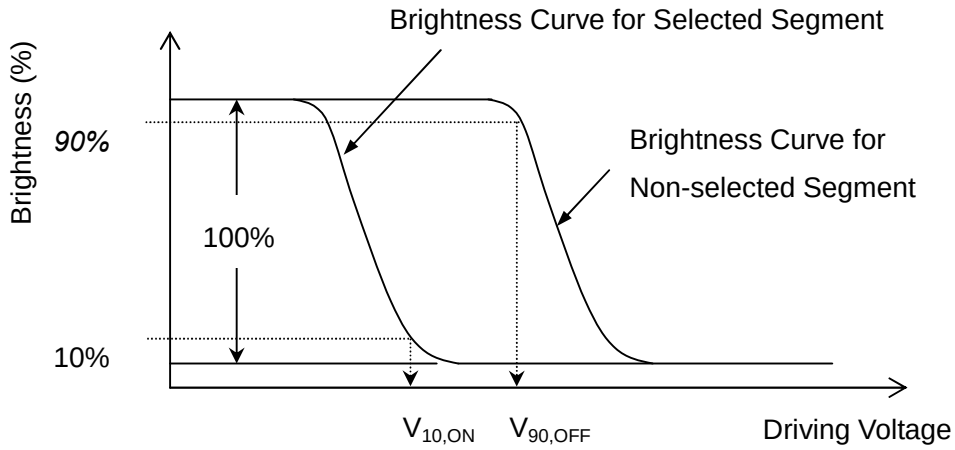

6.3 Definition of Optical Response Time

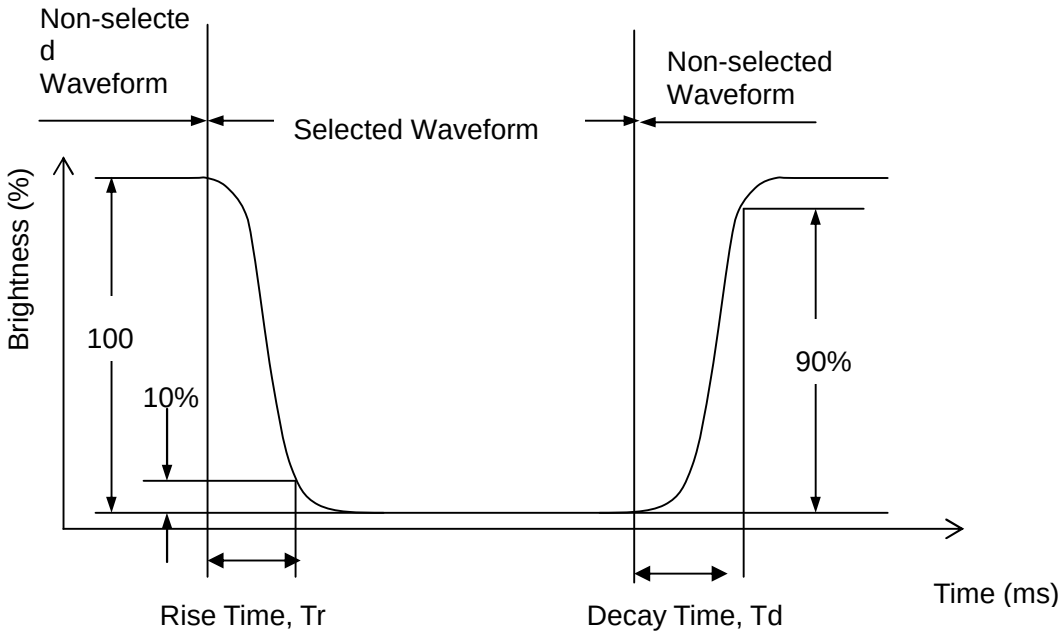

6.4 Definition of Viewing Angle θ and

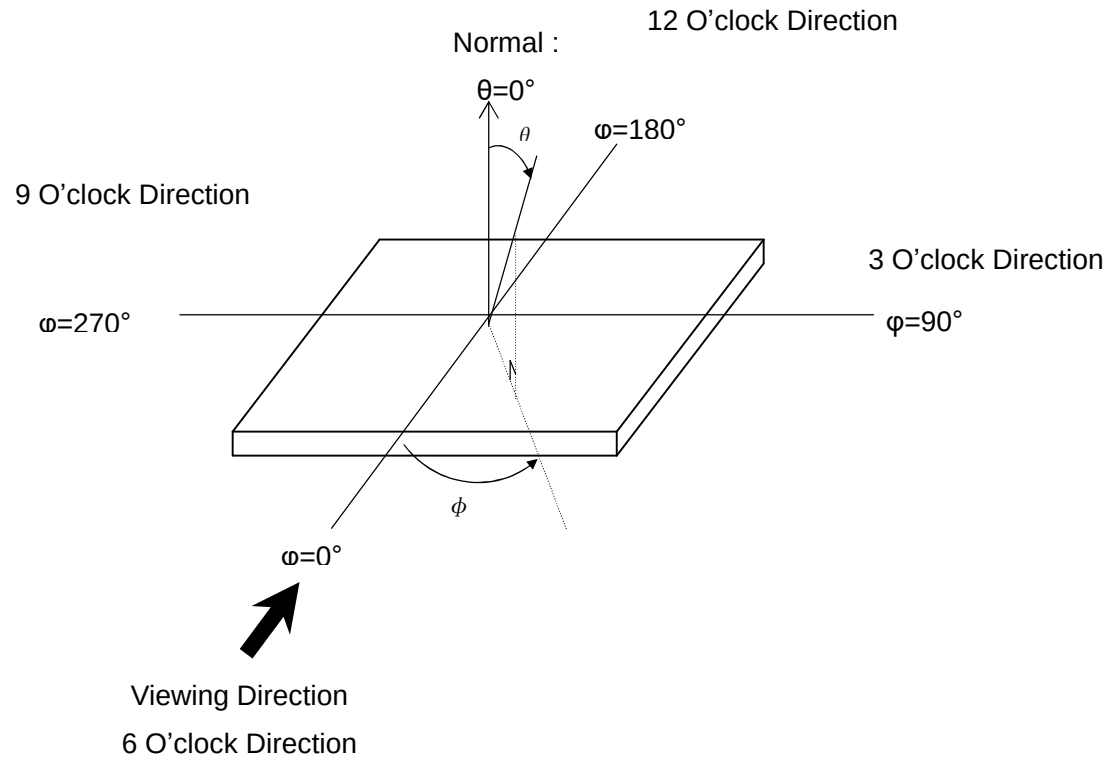

6.5 Definition of Contrast ratio, CR

$$CR = \frac{\text{Brightness of Non-selected Segment (B2)}}{\text{Brightness of Selected Segment (B1)}}$$

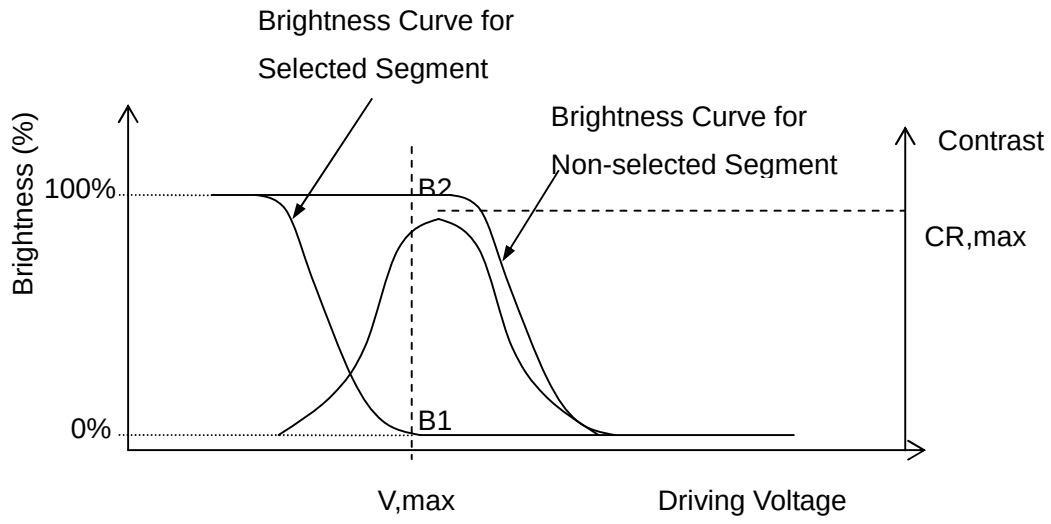

7.INSPECTION CRITERIA

7.1 Inspection Conditions

7.11 Environmental conditions

The environmental conditions for inspection shall be as follows
Room temperature: 20±3°C
Humidity: 65±20%RH

7.12 The external visual inspection

With a single 20-watt fluorescent lamp as the light source, the inspection was in the distance of 30cm or more from the LCD to the inspector's eyes .

7.2 Light Method

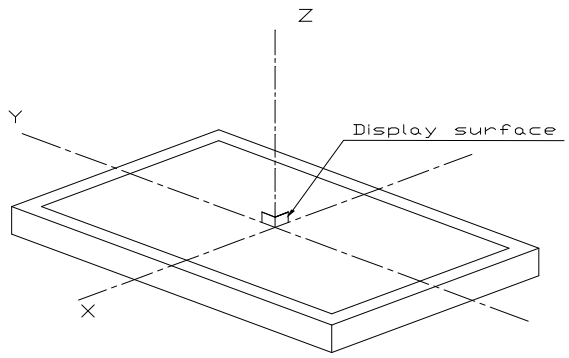

Fluorescent lamp perpendicular to the display surface.

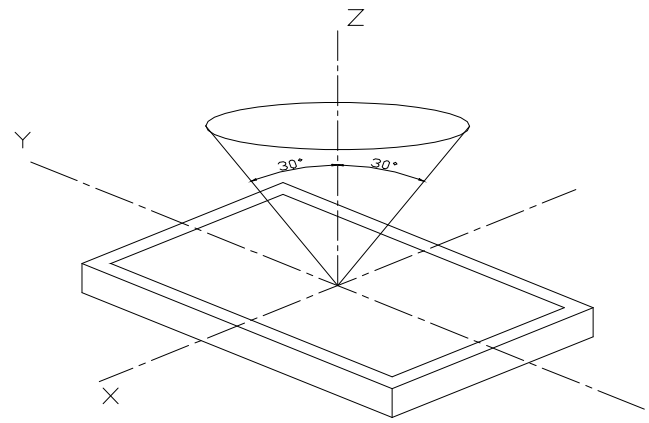

Inspection distance and angle

Inspection should be performed within angleφ(φis usually 30°) from Z axis to each X and Y.
Inspection distance in any direction within φmust be kept 30±5cm from the display surface.

.

7.3 Classification of defects

7.3.1Major defect

A major defect refers to a defect that may substantially degrade usability for product applications.

7.3.2 Minor defect

A minor defect refers to a defect which is not considered to be able substantially degrade the product application or a defect that deviates from existing standards almost unrelated to the effective use of the product or its operation.

8.RELIABILITY

8.1MTBF

The LCD module shall be designed to meet a minimum MTBF value of 50000 hours with normal. (25°C in the room without sunlight)

8.2 Tests

NO.	Test Item	Test condition	Criterion
1	High Temperature Storage	80℃±2℃ 96H Restore 2H at 25℃ Power off	Aftertesting,cosmetic and electrical defects should not happen.
2	Low Temperature Storage	-30℃±2℃ 96H Restore 2H at 25℃ Power off	
3	High Temperature Operation	70℃±2℃ 96H Restore 2H at 25℃ Power on	
4	Low Temperature Operation	-20℃±2℃ 96H Restore 2H at 25℃ Power on	
5	High Temperature & Humidity Operation	60℃±2℃ 90%RH 96H Power on	
6	Temperature Cycle	--30℃←→25℃←→80℃ 30min 5min 30min after 10 cycle, Restore 2H at 25℃ Power off	
7	Vibration Test	10Hz~150Hz, 100m/s2, 120min	
8	Shock Test	Half-sinewave,300m/s2,11ms	

9 PRECAUTIONS FOR USING LCD MODULE

9.1 HANDING PRECAUTIONS

(1) The display panel is made of glass. Do not subject it to a mechanical shock or impact by dropping it.

(2) If the display panel is damaged and the liquid crystal substance leaks out, be sure not to get any in your mouth. If the substance contacts your skin or clothes, wash it off using soap and water.

(3) Do not apply excessive force to the display surface or the adjoining areas since this may cause the color tone to vary.

(4) The polarizer covering the display surface of the LCD module is soft and easily scratched. Handle this polarizer carefully.

(5) If the display surface becomes contaminated,breathe on the surface and gently wipe it with a soft dry cloth. If it is heavily contaminated, moisten a cloth with one of the following solvents:

- Isopropyl alcohol
- Ethyl alcohol

(6) Solvents other than those above mentioned may damage the polarizer.
Especially, do not use the following:
- Water
- Ketone
- Aromatic solvents

(7) Extra care to minimize corrosion of the electrode. Water droplets, moisture condensation or a current flow in a high-humidity environment accelerates corrosion of the electrode.

(8) Install the LCD Module by using the mounting holes. When mounting the LCD Module, make sure it is free of twisting, warping and distortion. In particular, do not forcibly pull or bend the I/O cable or the backlight cable.

(9) Do not attempt to disassemble or process the LCD Module.

(10) NC terminal should be open. Do not connect anything.

(11) If the logic circuit power is off, do not apply the input signals.

(12) To prevent destruction of the elements by static electricity, be careful to maintain an optimum work environment.

- Be sure to ground the body when handling he LCD Module.
- Tools required for assembling, such as soldering irons, must be properly grounded.
-To reduce the amount of static electricity generated, do not conduct assembling and other work under dry conditions.
-The LCD Module is coated with a film to protect the display surface. Exercise care when peeling off this protective film since static electricity may be generated.

9.2 STORAGE PRECAUTIONS

When storing The LCD Module, avoid exposure to direct sunlight of fluorescent lamps. Keep the modules in bags (avoid high temperature/ high humidity and low temperatures below 0℃). Whenever possible, the LCD Module should be stored in the same conditions in which they were shipped from our company.

9.3 OTHERS

Liquid crystals solidify under low temperature (below the storage temperature range) leading to defective orientation or the generation of air bubbles (black or white). Air bubbles may also be generated if the module is subject to a low temperature.

If the LCD Module have been operating for a long time showing the same display patterns the display patterns may remain on the screen as ghost images and a slight contrast

irregularity may also appear. A normal operating status can be recovered by suspending use for some time. It should be noted that this phenomenon does not adversely affect performance reliability.

To minimize the performance degradation of the LCD Module resulting from destruction caused by static electricity etc. exercise care to avoid holding the following sections when handling the modules.

- Exposed area of the printed circuit board.
- Terminal electrode sections.

10. USING LCD MODULES

10.1 LIQUID CRYSTAL DISPLAY MODULES

LCD is composed of glass and polarizer. Pay attention to the following items when handling.

(1) Please keep the temperature within specified range for use and storage. Polarization degradation, bubble generation or polarizer peel-off may occur with high temperature and high humidity.

(2) Do not touch, push or rub the exposed polarizers with anything harder than a HB pencil lead (glass, tweezers, etc).

(3) N-hexane is recommended for cleaning the adhesives used to attach front/rear polarizers and reflectors made of organic substances, which will be damaged by chemicals such as acetone, toluene, toluene, ethanol and isopropyl alcohol.

(4) When the display surface becomes dusty, wipe gently with absorbent cotton or other soft material like chamois soaked in petroleum ether. Do not scrub hard to avoid damaging the display surface.

(5) Wipe off saliva or water drops immediately, contact with water over a long period of time may cause deformation or color fading.

(6) Avoid contacting oil and fats.

(7) Condensation on the surface and contact with terminals due to cold will damage, stain or polarizers. After products are tested at low temperature they must be warmed up in a container before coming is contacting with room temperature air.

(8) Do not put or attach anything on the display area to avoid leaving marks on.

(9) Do not touch the display with bare hands. This will stain the display area and degrade insulation between terminals (some cosmetics are determinate to the polarizers).

(10)As glass is fragile, it tends to become or chipped during handling especially on the edges. Please avoid dropping or jarring.

10.2 INSTALLING LCD MODULE

Attend to the following items when installing the LCM.

(1) Cover the surface with a transparent protective plate to protect the polarizer and LC cell.

(2) When assembling the LCM into other equipment, the spacer to the bit between the LCM and the fitting plate should have enough height to avoid causing stress to the module surface, refer to the individual specifications for measurements. The measurement tolerance should be ±0.1mm.

10.3 ELECTRO-STATIC DISCHARGE CONTROL

Since this module uses a CMOS LSI, the same careful attention should be paid for electrostatic discharge as for an ordinary CMOS IC.

(1) Make certain that you are grounded when handing LCM.

(2) Before removing LCM from its packing case or incorporating it into a set, be sure the module and your body have the same electric potential.

(3) When soldering the terminal of LCM, make certain the AC power source for the soldering iron does not leak.

(4) When using an electric screwdriver to attach LCM, the screwdriver should be of ground potentiality to minimize as much as possible any transmission of electromagnetic waves produced sparks coming from the commutator of the motor.

(5) As far as possible, make the electric potential of your work clothes and that of the workbenches to the ground potential.

(6) *To reduce the generation of static electricity , be careful that the air in the work is not too dried. A relative humidity of 50%-60% is recommended.*

10.4 PRECAUTION FOR SOLDERING TO THE LCM

(1) Observe the following when soldering lead wire, connector cable and etc. to the LCM.

-Soldering iron temperature: 280 ±10°C.

-Soldering time: 3-4 sec.

-Solder: eutectic solder.

If soldering flux is used, be sure to remove any remaining flux after finishing to soldering operation. (This does not apply in the case of a non-halogen type of flux.) It is recommended that you protect the LCD surface with a cover during soldering the prevent any damage due to flux spatters.

(2) When soldering the electroluminescent panel and PC board, the panel and board should not be detached more than three times. This maximum number is determined by the temperature and time conditions mentioned above, though there may be some variance depending on the temperature of the soldering iron.

(3) When removing the electroluminescent panel from the PC board, be sure the solder has completely melted, otherwise the soldered pad on the PC board could be damaged.

10.5 PRECAUTIONS FOR OPERATION

(1) Viewing angle varies with the change of liquid crystal driving voltage (Vo). Adjust Vo to show the best contrast.
(2) Driving the LCD in the voltage above the limit will shorten its lifetime.
(3) Response time is greatly delayed at temperature below the operating temperature range. However, this does not mean the LCD will be out of the order. It will recover when it returns to the specified temperature range.
(4) If the display area is pushed hard during operation, the display will become abnormal. However, it will return to normal if it is turned off and then on.
(5) Condensation on terminals can cause an electrochemical reaction disrupting the terminal circuit. Therefore, it must be used under the relative condition of 40°C, 50% RH.
(6) When turning the power on, input each signal after the positive/negative voltage becomes stable.

10.6 STORAGE

When storing LCDS as spares for some years, the following precaution are necessary.
(1) Store them in a sealed polyethylene bag. If properly scaled, there is no need for desiccant.
(2) Store them in a dark place. Do not expose to sunlight or fluorescent light, keep the temperature between 0°C and 35°C.
(3) The polarizer surface should not come in contact with any other objects. (We advise you to store them in the container in which they were shipped.)
(4) Environmental conditions:
-Do not leave them for more than 168hrs. at 60 °C.
-Should not be left for more than 48hrs. at –20 °C.

10.7 SAFETY

(1) It is recommended to crush damaged or unnecessary LCDs into pieces and wash them off with solvents such as acetone and ethanol, which should later be burned.
(2) If any liquid leaks out of a damaged glass cell and comes in contact with the hands, wash off thoroughly with soap and water.

10.8. RETURN LCM UNDER WARRANTY

No warranty can be granted if the precautions stated above have been disregarded. The typical examples of violations are:

-Broken LCD glass.
-PCB eyelet’s damaged or modified.

-PCB conductors damaged.

-Circuit modified in any way, including addition of components.

-PCB tampered with by grinding, engraving or painting varnish.

-Soldering to or modifying the bezel in any manner.

Module repairs will be invoiced to the customer upon mutual agreement. Modules must be returned with sufficient description of the failures or defects. Any connectors or cable installed by the customer must be removed completely without damaging the PCB eyelet's conductors and terminals.